Furnish and install Electric Forced Air Heaters, Series 3380 where specified. The heaters shall be constructed of a heavy gauge steel housing. The rough-in dimensions are 19-3/16” wide x 4” deep. The finish shall be baked-on powder coat in Ceiling White color. The units shall be available in ratings from 1500 through 4800 Watts with an optional factory installed single pole thermostat.

The heaters shall have a low speed 600-RPM motor, which drives a vane axial blower to deliver a quite 175 CFM’s of down flow air. The heating element shall be of the block finned type with large, parallel steel fins for quick heat transfer. Unit shall have as standard, a manual reset capillary type limit control, for added safety. Unit weight 22 pounds.

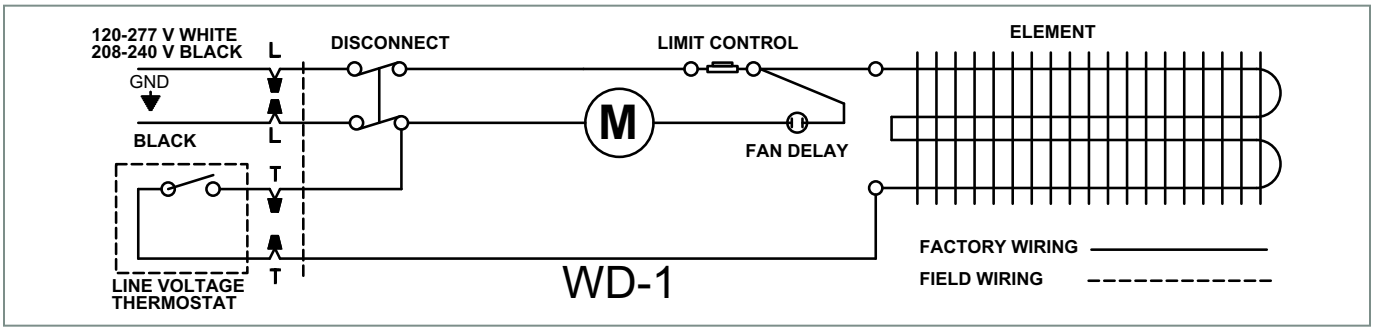

Figure 1, Flush Mounted Figure 2, Surface Mounted Figure 3, 2x2 T-Bar Installation

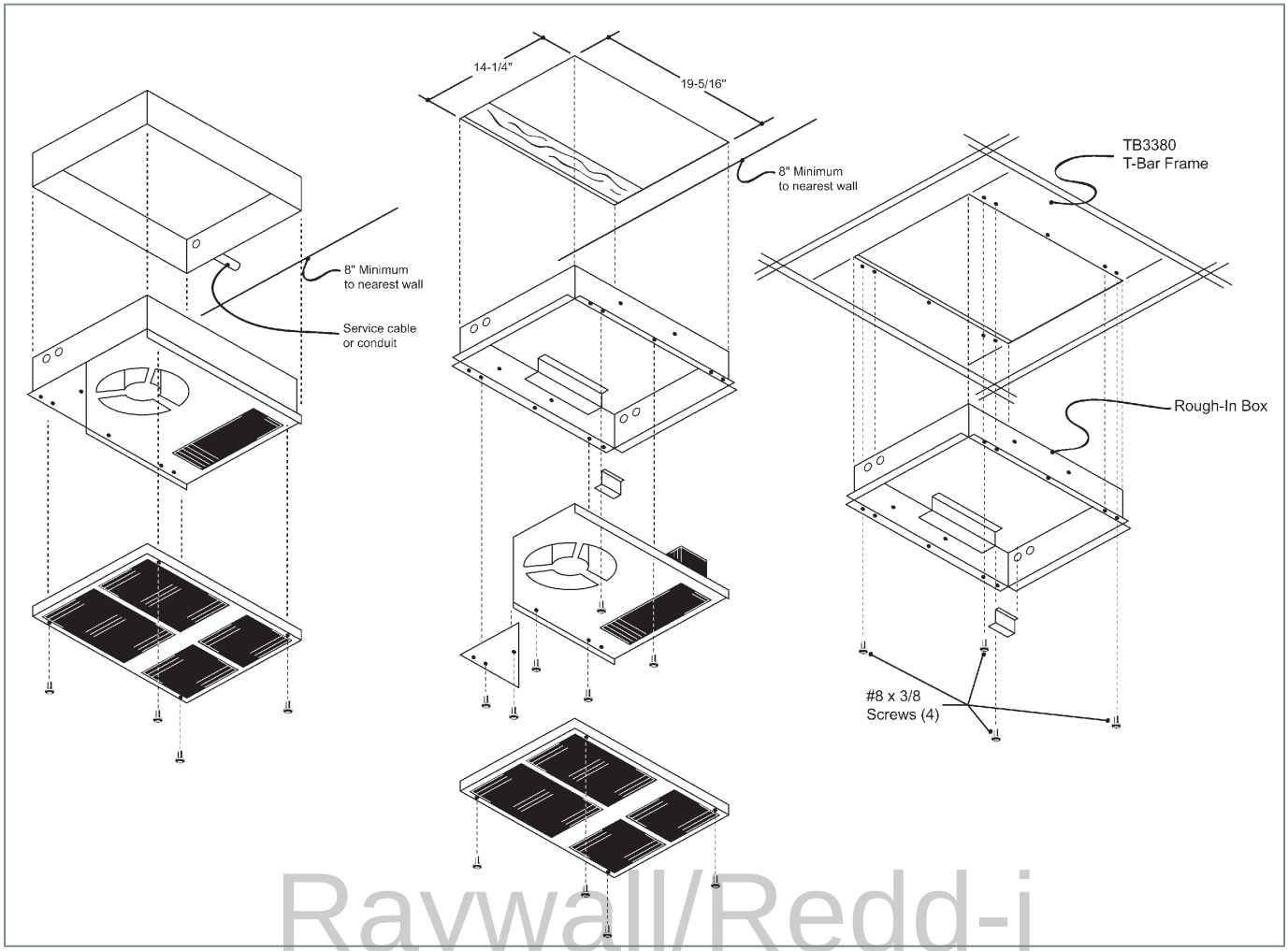

Raywall/Redd-i

Click to Email

SUBMITTAL DATA, 3380 SERIES

Print Form

AGENT	PROJECT	ENGINEER	DATE

TAG					
QTY.					
MODEL					
WATTS					
VOLTS SINGLE PHASE					
ACCESSORIES					
NOTES					

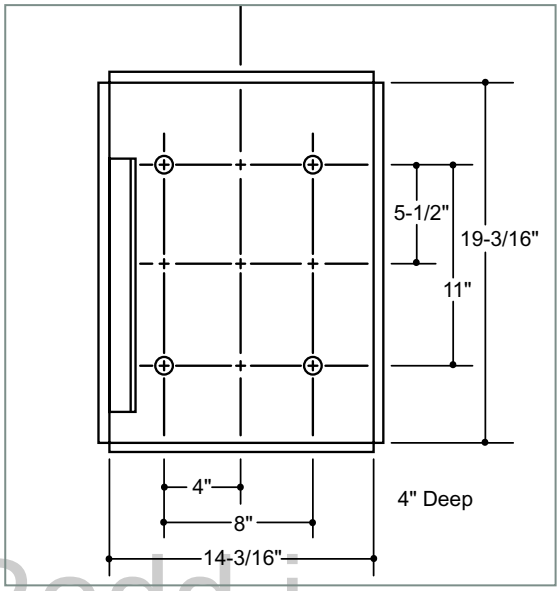

Location of rough-in box mounting holes.

Raywall/Redd i