DESIGN:
The SCH Series heater shall be designed to provide an even distribution of heated air by drawing return air in the periphery of the heater, across and through the element and be discharged from the center section of the heater by means of an electric motor and axial flow fan blade.

INSTALLATION:
Heater shall be surface mounted. Enclosure shall be constructed of 1/16 inch by 3/8 inch rounded edge horizontal steel louvers, which shall be spaced for maximum opening of 5/16 inch. Louvers shall be welded at every intersection to evenly spaces 1/8 inch diameter vertical members. Discharge grill to have concentric rings for uniform air discharge. Grill assembly shall be attached to chassis by tamper resistant (Allen Head) machine screws. All parts of enclosure shall be heavy gauge steel, zinc coated both sides and finished in neutral off white powder coated paint.

MOTOR:
Motor shall be permanently lubricated, unit bearing, totally enclosed shaded pole type with impedance protection. Motors shall operate at no more than 1300 RPM and shall be same voltage as heater. All motors shall be single phase. Heaters shall have a rating of 425 CFM at 710 FPM with a maximum temperature rise of 44 degrees F and 63.9 DB RE 10.12 watt.

ELEMENT:
Elements are all steel tubes with highest quality nickel chromium resistance wire embedded in compacted efficient dielectric to ensure proper heat transfer. Steel helical fins are machine crimped and brazed to steel tube for effective transfer of heat.

LIMIT CONTROLS:
Heaters shall be equipped with a “zero voltage reset” thermal overload, which disconnects elements and motor if normal operating temperatures are exceeded. for safety, if opened due to abnormal temperatures, thermal overload shall remain open until manually reset by turning off power to heater for five minutes. Automatic reset thermal overload, which allow the element to continue to cycle under abnormal conditions, will not be accepted.

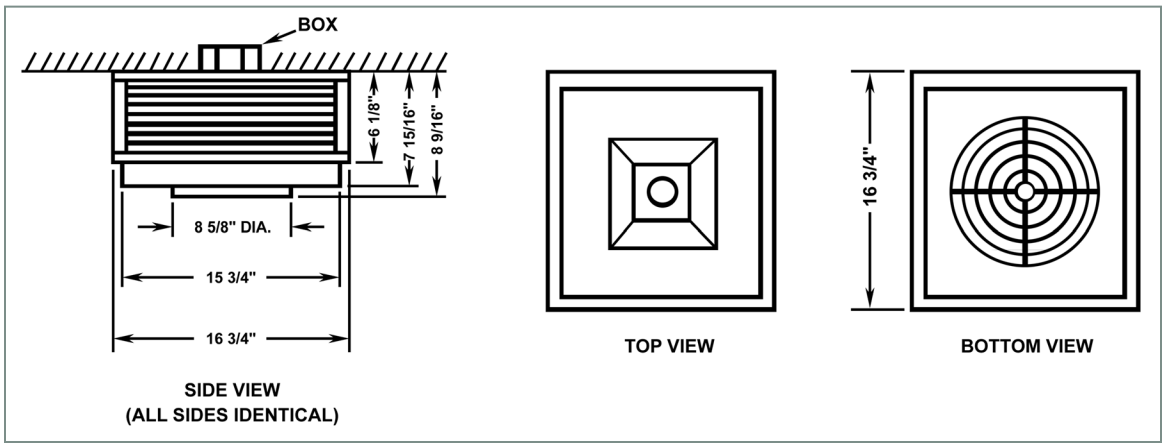

Raywall/Redd-i

Click to Email

SUBMITTAL DATA, SCH SERIES

Print Form

AGENT	PROJECT	ENGINEER	DATE

TAG					
QTY.					
MODEL NUMBER					
VOLTS / PHASE					
KW					
THERMOSTAT					
OPTIONS					
NOTES					

Shipping weight 32 lbs.

CONTROL PANELS: For control of one or more single or three phase ceiling heaters from one 24V or 120V thermostat. Panels are in NEMA 1 enclosures and have one or more 25 Amp, three pole, 600 VAC contactor(s), operating voltage to control voltage transformer and transformer fusing. (User must provide separate circuit for each contractor).

CONTROLS

DIRECT LINE VOLTAGE: More than one heater may be controlled from one thermostat providing total amperage of heaters does not exceed thermostat rating.

SINGLE PHASE HEATERS: Use any good quality single pole thermostat of sufficient ampacity. Use double pole thermostat if positive off is desired. Knob operated and tamper resistant type available.

THREE PHASE HEATERS: Use TW1512. Makes and breaks two poles simultaneously. Add TW1500 kit for tamper proofing.

Control Panel Field Mounted Accessory				
PRIMARY VOLTAGE	DIMESIONS	NO. OF CONTACTORS	MODEL NUMBER WITH	
			24V CONTROL	120V CONTROL
208 240 277	12” x 12” x 4 1/2”	1	AF3401-24 AH3401-24 AG3401-24	AF3401-120 AH3401-120 AG3401-120
208 240 277	15” x 15” x 4 1/2”	2	AF3402-120 AH3402-24 AG3402-24	AF3402-120 AH3402-120 AG3402-120
208 240 277	20” x 20” x 4 1/2”	3	AF3403-24 AH3403-24 AG3403-24	AF3403-120 AH3403-120 AG3403-120

Raywall/Redd-i