CABINET:
ASHDB Series shall be constructed of 16-gauge steel with a one-piece front cover and back plate. The discharge grill shall be 12-gauge one-piece continuous extruded aluminum with an alloy of 6063 and hardened to a temper of T5. The ASHDB shall be available 5-l/2” wide and any height increment from 8” to 20”. Custom factory enclosures to 1/16” increments are built for exact wall to wall fit up to 10’ enclosure lengths. The 16-gauge back plate will be pre-punched on wall-mounted units and un-punched on pedestal-mounted units with smooth finished backs. Pedestal mounting shall be available on 8” high units only. The Snap-Fit Front Cover shall have no screw leads or fasteners. The die punched extruded aluminum discharge grill shall be ¼” pencil proof.

ELEMENTS:
High mass sheathed element construction with nickel-chromium resistance wire embedded in compacted efficient dielectric to ensure proper heat transfer. Aluminum fins mechanically bonded to metal sheath tube allows for increased surface area and even heat transfer.

LIMIT CONTROLS:
Automatic reset hydraulic thermal overload cover full length of heating element and shuts down heater when safe operating temperatures are exceeded.

WIRING:
Wiring shall be in either end of the enclosure in factory-installed junction boxes. Knockouts (l/2” and ¾”) shall be provided on side and rear of Junction Box. All heat sections shall have a ½” EMT Built-In Raceway for wiring from either end of unit for end-to-end fit.

CONTROLS:
Optional thermostat and disconnect switch can be factory mounted in junction boxes. The controls shall be accessible and adjustable through top grill and be tamper resistant. Relays and transformer relays are available for factory mounting in control section. The control section shall add to enclosure length.

APPLICATIONS:
ASHDB Units are not U.L. Listed for Residential Applications.

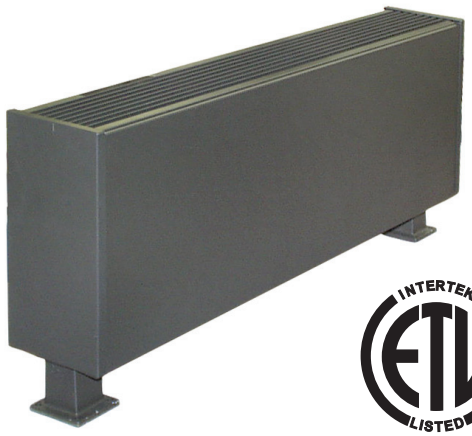

- Cabinet Dimensions: 5-1/2” x 8” through 20” x 10’ maximum length
- 500 Watts per foot maximum
- 16 gauge steel enclosure, 18 gauge backplate
- Heights may vary frrom 8” up to 20”
- Bottom intake / top discharge

Raywall/Redd-i

ASHDB Series 5 1/2" x 8" Architectural Electric Sill Convector

ASHDB Series - Dimensions

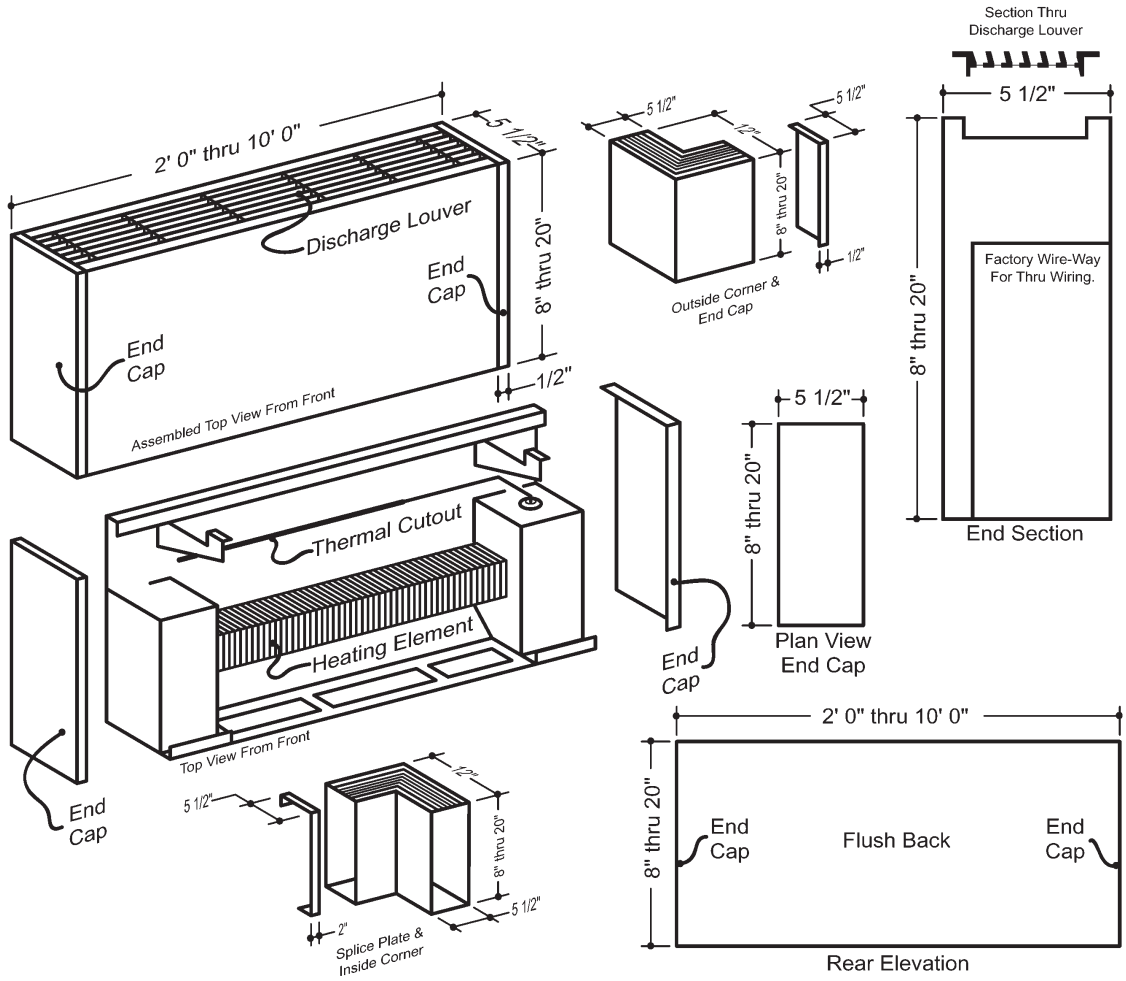

Pedestal Heaters - ASHDB-8PD, 100 - 500 Watts per Foot

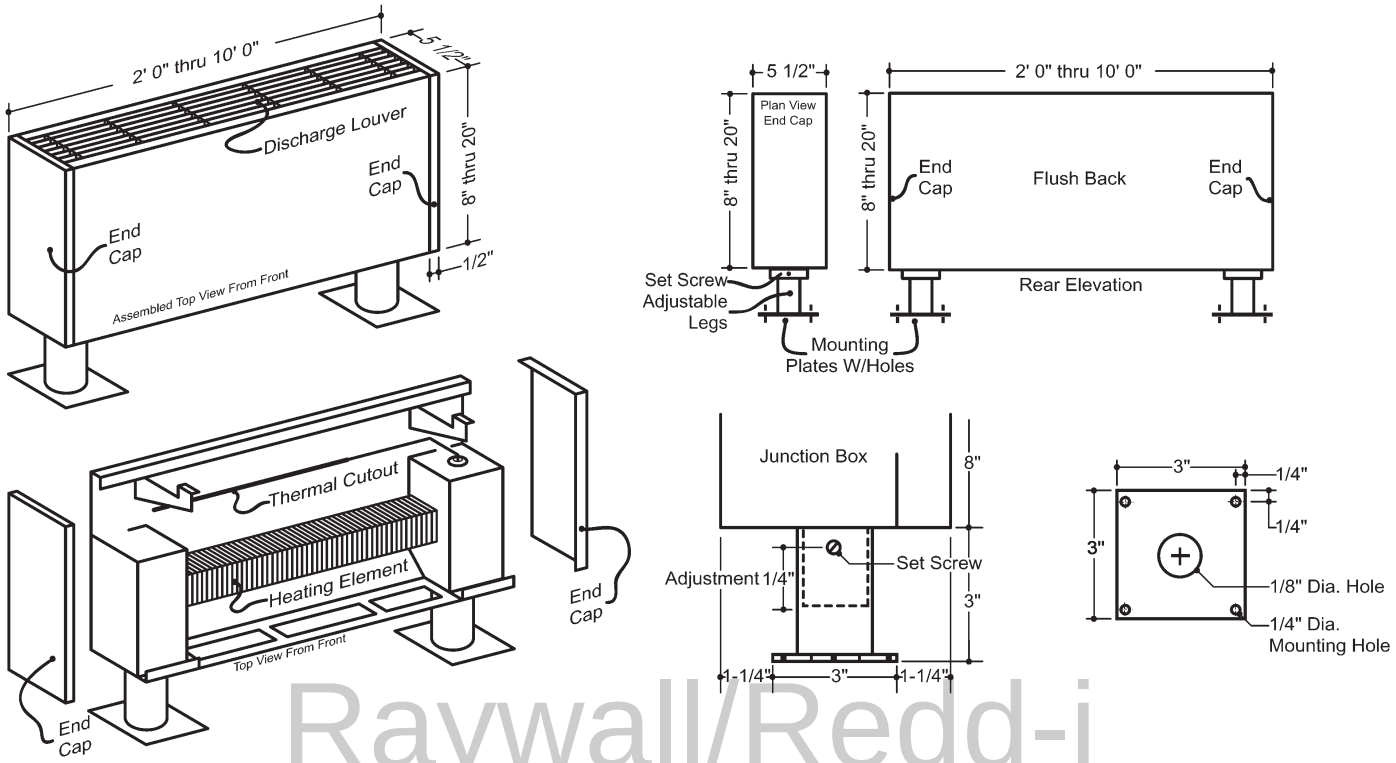

Raywall/Redd-i

Click to Email

SUBMITTAL DATA, DBF / DBT SERIES

Print Form

AGENT	PROJECT	ENGINEER	DATE

TAG					
QTY.					
MODEL					
HEIGHT					
HEATED LENGTH					
BLANK					
WATTS / FOOT					
TOTAL LENGTH					
CONTROLS					
OPTIONAL ACCESSORIES					
WALL OR PEDESTAL					
FINISHED BACK					
VOLTS SINGLE PHASE					
COLOR					
NOTES					

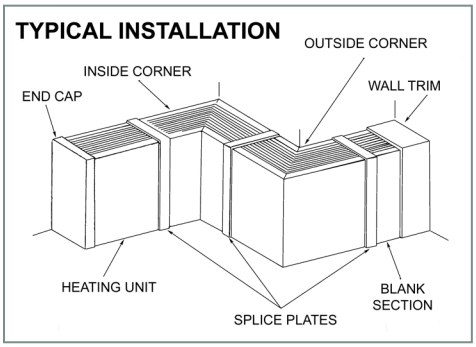

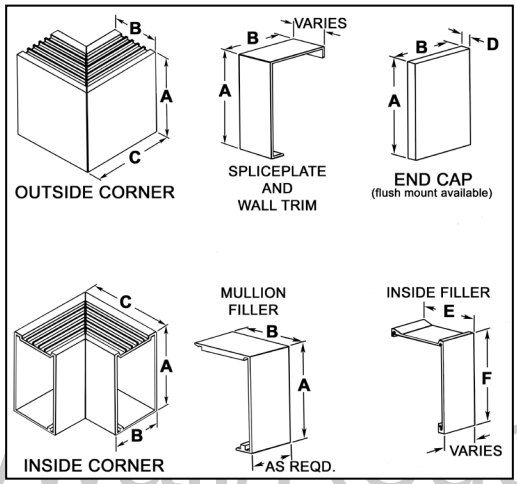

Dim	ASHDB
A	Specified Height
B	5-1/2”
C	12”
D	1/2”
E	5-3/8”
F	1/8 less specified height

Raywall Read-I