CABINET:
CB Series shall be constructed of 14 gauge extruded 6063 aluminum heat treated to T5 hardness. The uni-lock construction shall allow easy installation and access to back plate for wiring. The snap-fit front cover makes installation and service access very simple. Custom factory enclosures to 1/16 inch increments are built for exact wall to wall fit up to 10 feet enclosure lengths. The 14 gauge back plate will be pre punched on wall mounted units and unpunched on pedestal mounted units for smooth finished backs. The die punched front cover will have no screw leads or fasteners. The die punched extruded louvers shall be ¼ inch pencil proof.

ELEMENTS:
High mass sheathed element construction with nickel-chromium resistance wire embedded in compacted efficient die-electric to ensure proper heat transfer. Aluminum fins mechanically bonded to metal sheath tube allows for increased surface area and even heat transfer.

LIMIT CONTROLS:
Automatic reset hydraulic thermal overload covers full length of heating element and shuts down heater when safe operating temperatures are exceeded.

WIRING:
Wiring shall be in either end of the enclosure. In factory installed junction boxes. Knockouts (1/2 inch and ¾ inch) shall be provided on side and rear of junction box. All heat sections shall have a ½ inch EMT built-in raceway for wiring from either end of unit for end to end fit.

CONTROLS:
Optional controls include thermostat and disconnect switch that are factory wired in enclosed junction box on each end of heater enclosure. Relay and transformer relay options shall be mounted in control section. This additional control section will add length to enclosure.

APPLICATION:
The CB Series is not Listed for residential applications.

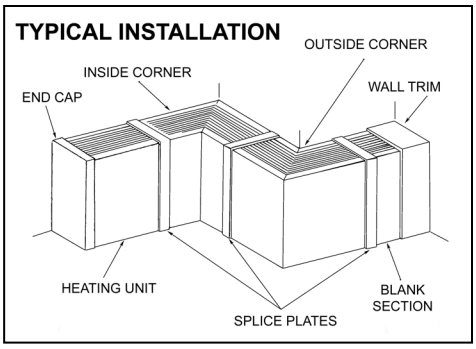

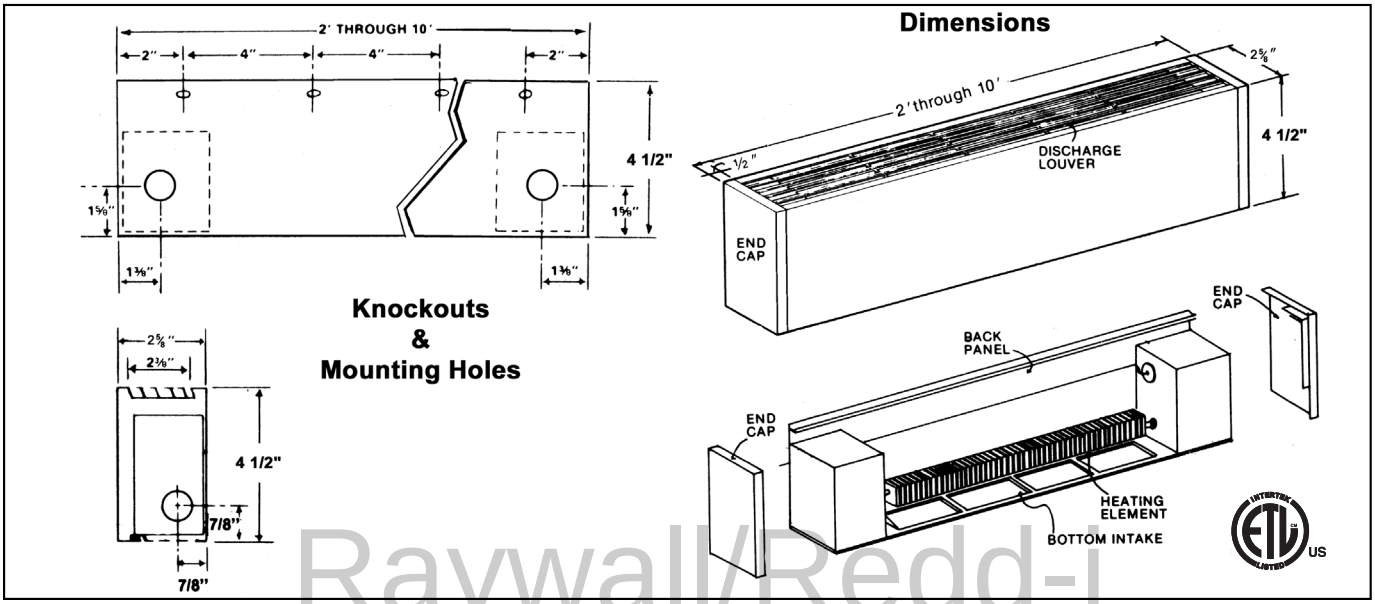

Raywall/Redd-i

Click to Email

SUBMITTAL DATA, CB SERIES

Print Form

AGENT	PROJECT	ENGINEER	DATE

TAG					
QTY.					
MODEL SIZE					
WALL MOUNTED					
PEDESTAL					
HEATED LENGTH					
BLANK					
WATTS / FOOT					
TOTAL LENGTH					
DOUBLE POLE THERMOSTATS					
DISCONNECT SWITCH					
OTHER CONTROL OPTIONS					
CONTROL SECTION					
FINISHED BACK					
VOLTS SINGLE PHASE					
COLOR					
NOTES					

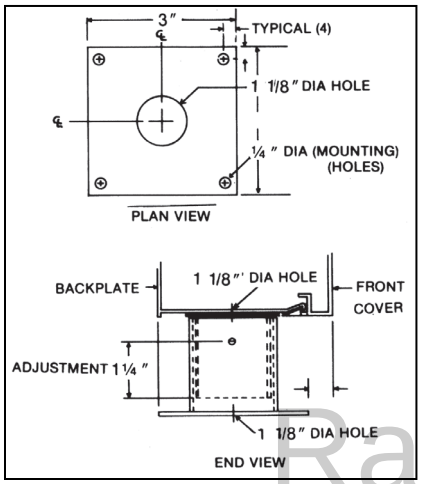

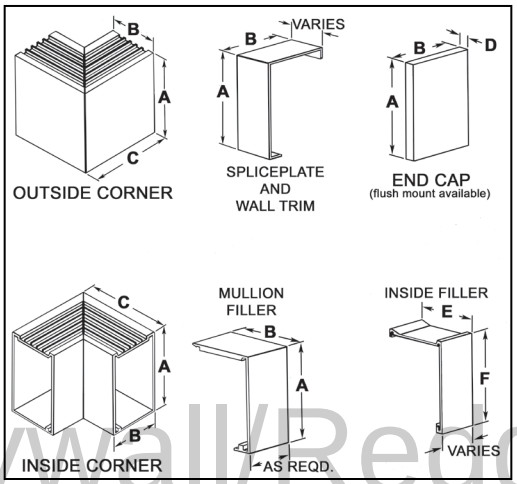

Dim	DBTS
A	4-1/2”
B	2-5/8”
C	6”
D	1/2”
E	2-1/2”
F	4-3/8”

Raywall/Redd-i