T Series Multiple Angle Cabinet Unit Heater

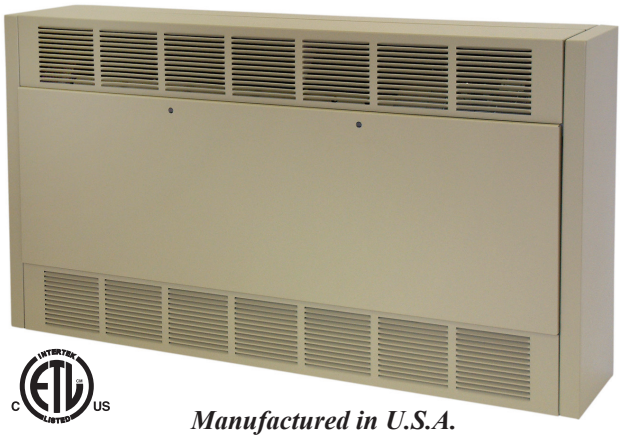

Manufactured in U.S.A.

The electric cabinet unit heater shall be be UL listed, designed for mounting in any position, fully recessed, semi-recessed or surface mounted. All capacities, voltages, physical sizes, grille arrangements and options shall be as specified on the plans. All units must be field convertible to the following:

1. For control by a field supplied remote thermostat.
2. Load management control with an external dry switch. When closed unit operates under control of either the internal or the external thermostat. When open, unit turns off.
3. Any grille arrangement.

CABINET: The cabinet shall be constructed of heavy duty 16 Gauge Zinc coated steel. The heater shall have a removable front door for easy access to the control panel, elements, motor-blower assembly, filters and all internal components. The grill configuration must be easily field convertible to any air flow configuration (by removal of no more than four fasteners). The cabinet shall have a textured finish of two coats of powder coat epoxy and be suitable for use with optional kick space base.

HEATING ELEMENTS: The heating elements shall be warranted for 1 year and shall be non-glowing design consisting of special high temperature resistance wire enclosed in an incoloy sheath to which steel fins are furnace brazed. The heating elements shall be located directly in front of the blower discharge air for uniform heating. They shall be mounted with a single anchor at one end to minimize effects of thermal expansion and contraction.

SAFETY CUTOUT: Thermal safety limits shall be built into the system to automatically shut off heater in event of overheating due to any cause. The safety cutouts shall be of two types:

A. The primary limit shall be an automatic capillary type to sense the heat along the full length of the heating elements. It shall de-energize the heaters by opening the coil circuit on the heating contactors.
B. The secondary limit shall be a manual reset thermal device to interrupt power to the heating elements.

MOTOR AND BLOWER ASSEMBLY: The motors and blowers shall be direct drive and resiliently mounted on rigid heavy gauge frame for quiet operation and long life. The motor shall be two-speed, shaded pole type, rated for the voltage (480 to 600 Volts are single speed only). Each shall have built-in automatic reset overload protection and are life time lubricated. The motor shall be vented and mounted in the air stream to provide maximum cooling of the motor.

HIGH AND LOW HEAT RANGES: All units will be supplied as standard with a switch for selecting full heat at high fan speed or reduced heat at low fan speed (On 480 & 600 Volt units the switch changes the heat but not the fan speed).

OVERCURRENT PROTECTION: Circuit breakers shall be provided for branch circuit protection where required by NEC. Circuit breakers are optional on all other heaters.

TEMPERATURE CONTROL: Integral factory installed thermostat shall be tamper resistant, linear capillary type.
Filters:

FILTERS: Optional filters shall be located in front of the motor and blower assembly to assure clean air circulation. Both replaceable or washable filters are available.

OUTSIDE AIR DAMPER: Optional built in manually operated damper to provide up to 25% outside air is available and must be used with kickspace base option for field connection to air inlet.

Mounting Configurations

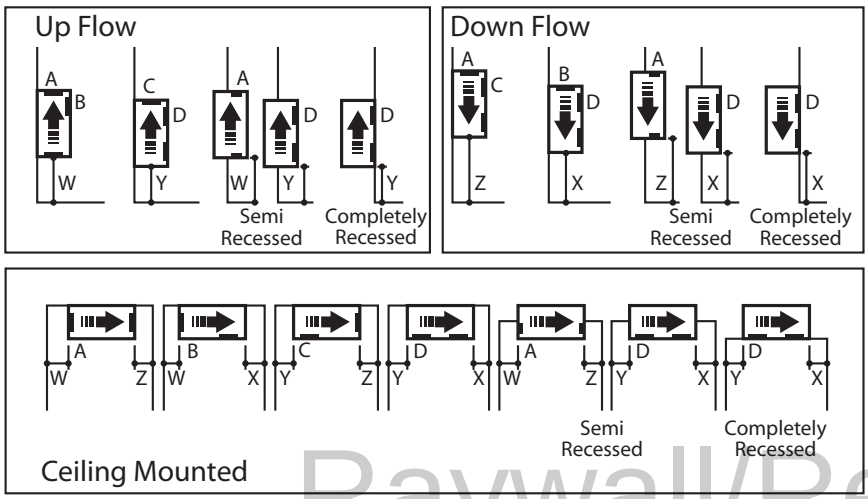

KEY: W = 6" minimum, X = 12" minimum, Y = 0" or greater, Z = 24" minimum

NOTE: Semi-recessed units are to be recessed at a maximum of 3 1/2" unless grill configuration is front in and front out.

MOUNTING CLEARANCES: Proper clearances are indicated for each mounting configuration on all positions. Minimum clearance from side of unit to the wall is zero inches. Mounting inches are provided in the back of the cabinet, accessible through the blower compartment, if necessary, remove blower deck if additional mounting screws or bolts are desired. Blower deck may be slipped forward by loosening four screws at the front to provide access to mounting holes.

Raywall/Reed-1

Click to Email

SUBMITTAL DATA, T SERIES

Print Form

AGENT	PROJECT	ENGINEER	CONTRACTOR

HOW TO DESIGNATE A MODEL:

T	46	D	08	24	1	2	B3	S	D	O	F
Series Number	Cabinet Size 33=33" 46 = 46" 66 = 66" 79 = 79"	Air Flow Configuration A = Bottom in / Top out C = Front in / Top out B = Bottom in / Front out D = Front in / Front out	Element KW 2KW through 24KW See model chart for length and KW options.	Element Voltage 20 = 208V 24 = 240V 27 = 277V 41 = 415V 48 = 480V 57 = 600V	Phase 1 = Single Phase 3 = Three Phase	Number of Wires in Electrical Service 2, 3, or 4	Control Options B1, B2, B3, B4, B5, B6, B7, B8 (see control options chart)	Summer Fan Switch S = Included O = Not Included	Disconnect Option C = Circuit Breaker D = Disconnect Switch O = None	Motor Fusing Option M = Required O = Not Required	Disposable Filter Option F = Required O = Not Required
Step 1	Step 2	Step 3	Step 4	Step 5	Step 6	Step 7	Step 8	Step 9	Step 10	Step 11	Step 12

DIGIT #		TAG					
1	Series	63	63	63	63	63	63
2	Cabinet Size						
3	Air Arrangement						
4	KW Rating						
5	Voltage						
6	Phase						
7	Number of Wires						
8	Control Options						
9	Fan Switch						
10	Disconnect / CB						
11	Motor Fusing						
12	Filter						

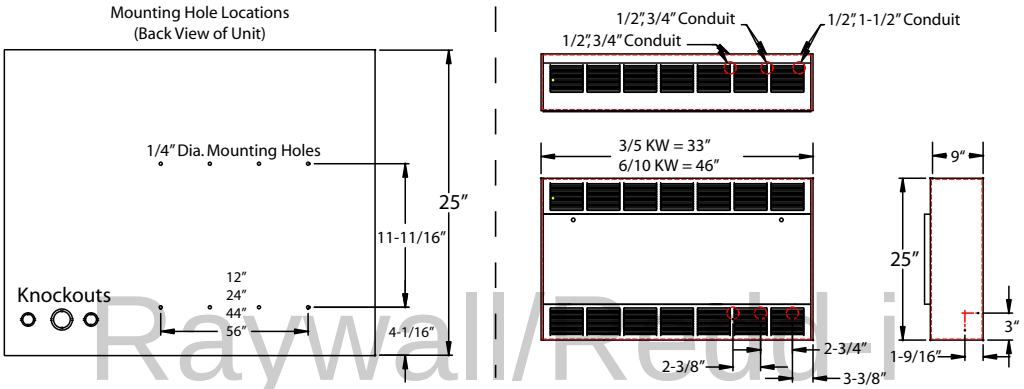

Raywall/Reddi