CABINET:
Cabinet fabricated of die formed 18 Gauge welded steel and finished with durable powder coated paint. Stamped louver periphery inlet grill maintains even airflow over heating elements. Adjustable louvers and outward drawn venturi provide accurate control of discharge airflow. Heater contains control compartment, housing a master terminal board with a hinged and latched access door locked in position by quarter turn fasteners, simplifying wiring, installation & maintenance.

ELEMENTS:
Elements are all steel tubes with highest quality Nickel-Chromium resistance wire embedded in compacted efficient dielectric to ensure proper heat transfer. Steel helical fins are machine crimped and brazed to tube for effective transfer of heat.

MOTOR:
Motors shall be totally enclosed, all angle industrial rated. Motor is single phase with voltage rating same as heater voltage rating. Single speed, 1 Phase permanently lubricated thermal protected unit bearing motor on 3-20 KW units. Two speed, 1 Phase thermally protected motors with sleeve bearings on 25-50 KW units. Sleeve bearing motor lubricated for 5 years continuous or 10-year intermittent use.

WIRING:
Heaters shall be designed for a single circuit with elements, motor and control circuits wired in accordance with latest National Electric Code and UL, Inc. Standard 2021. All three-phase heaters have balanced phases.

LIMIT CONTROLS:
All heaters have built in fan purge to dissipate residual heat from elements on heater shutdown. Automatic reset thermal cutout will shut down elements and motor if safe operating temperatures are exceeded.

CONTROLS:
Contactor and control circuit transformers where required are factory installed and wired. Single stage control on 3-20 KW Units. 25 KW and larger can be controlled as 2 stage operation with 2 stage thermostat.

CONTROL OPTIONS (FIELD INSTALLED):
Disconnect switch – disconnects all ungrounded connects.
Thermostat – Wall mounted or unit mounted
Summer Fan Switch – Fan only operation
Stratification Thermostat – Recycled warm air in high bay area.

MOUNTING:
The 5100 Series can be mounted in applications for horizontal air discharge or high bay areas in vertical air discharge position.

Raywall/Redd-i

Click to Email

SUBMITTAL DATA, 5100 SERIES

Print Form

AGENT	PROJECT	ENGINEER	DATE

TAG					
QTY.					
MODEL NUMBER					
VOLTS / PHASE					
KW					
THERMOSTAT					
CONTROL OPTIONS					
MOUNTING BRACKET					
NOTES					

Horizontal Discharge

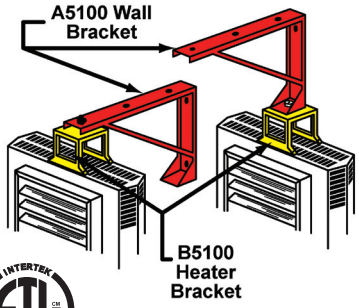

Unit heaters should always be used in low bay areas and places along outside walls, spaced and directed to set up generally circular air movement.

(*Included with A5100 bracket.)

Vertical Discharge

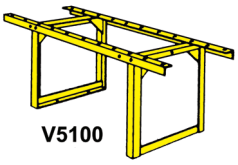

Down-blow unit heaters are recommended for use in high bay areas or in spaces where extended heat distribution is desired using a minimal number of heaters. A wide selection of accessory diffusers is available to establish air patterns and distribution to meet almost any requirements.

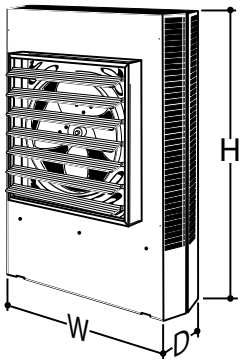

KW RATING	DIMENSIONS (inches)			WT. (LBS)
	H	W	D	
3.3 - 5.0	17 3/4	14 15/32	6 1/2	25
7.5 - 10.0	24 5/16	21 1/2	6 1/2	55
15.0 - 20.0	28 11/16	21 1/2	6 1/2	65
25.0 - 50.0	34	29 1/4	10 1/16	120

OPTIONAL MOUNTING BRACKETS			
UPC# 686334	MODEL	MODEL SIZE	WT.
692694	A5105	3.3 KW TO 5.0 KW	9 lbs.
692700	A5120	7.5 KW TO 20.0 KW	13 lbs.
692717	A5150	25.0 KW TO 50.0 KW	16 lbs.
688628	B5105*	3.3 KW TO 20.0 KW	3 lbs.
688635	B5150*	25.0 KW TO 50.0 KW	8 lbs.
692847	V5105	3.3 KW TO 5.0 KW	9 lbs.
692854	V5120	7.5 KW TO 20.0 KW	13 lbs.
692861	V5150	25.0 KW TO 50.0 KW	16 lbs.

Raywall/Redd I