SERIES:
CH -2, 4, 6, 13, & 27

HOUSING:
.040 Gold anodized Aluminum housing for efficeint, long-term reflectivity and corrosion resistance. High-density radiant heat. Housing is ETL Listed for indoor, dry environment applications only.

REFLECTOR:
60 degree symmetric heat pattern.

ELEMENTS:
Rugged U-shaped metal sheath elements. .430" diameter Inconel metal sheath. Nickel-chrome alloy coiled filament imbedded within a Magnesium Oxide insulating powder and threaded end terminations. Available wattages from 1800 to 4500 Watts per element. Available voltages from 120 to 600 Volts.

CONTROLS:
Heavy Duty, Metal Sheath heaters are not manufactured with any control device on the unit. All controls and accessories should be specified as remote mounted. Please consult the technical sales department of factory for help in determining applicable controls. Please follow installation instructions that accompany each heater.

ACCESSORIES:
Wire guards, thermostats, SCR controllers, and power contactor panels.

Mounting Clearances		Recommended Mounting Height	
All CH Models	24" from ceiling 36" from vertical surface & from another heater 72" from face of heater to combustible surface	1.8 & 2.0 KW	8' - 10'
		4.5 KW	8' - 12'
		6.0 KW	10' - 14'
		13.5 KW	12' - 16'
CH-27 Only	87" from face of heater to combustible surface	27.0 KW	15' - 30'

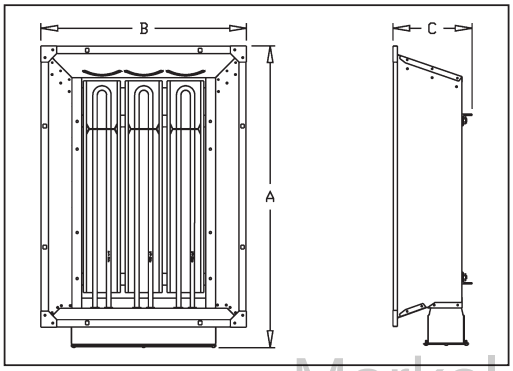

SERIES	DIMENSIONS (in.)		
	A LENGTH	B WIDTH	C DEPTH
CH-2	26	9	7.25
CH-4	46.5	9	7.25
CH-6	28.5	19.88	7.5
CH-13	50.5	19.88	7.5
CH-27	96.75	28.25	14.88

Markel Products Company

Click to Email

SUBMITTAL DATA, CH SERIES METAL SHEATH

Print Form

AGENT	PROJECT	ENGINEER	DATE

TAG					
QTY.					
MODEL					
LENGTH					
WATTS					
VOLTS / PHASE					
OPTIONS					
NOTES					

CH-2/4 KW

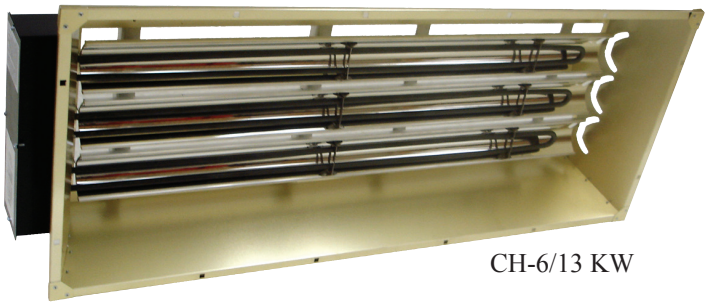

CH-6/13 KW

CH-27 KW

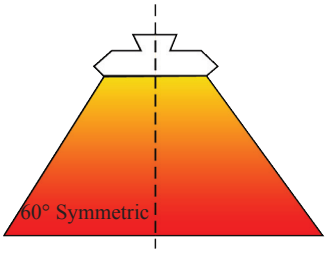

NOTE: Take into account that the CH Series is designed with a 60° symmetrical reflector heat pattern. The sizing chart can assist you based upon your mounting height.

Markel Products Company