TYPICAL SPECIFICATIONS:
Contractor shall supply and install heavy duty wall mounted forced air electric heaters of the wattage, voltage and phase as indicated on the plans. The heater shall so be designed to provide an even distribution of heated air to the space to be heated by drawing return air in the peripheral area of the heater across and through the element which shall then be discharged from the center section of the heater by means of an electric motor and axial flow fan blade. Heaters shall be recessed type to extend no more than 1 1/2" from the finished wall or surface mounted to extend no more than 5 3/4" from the finished wall or semi-recessed type to extend no more than 3 1/2" from finished wall or semi-recessed type to extend no more than 2 1/2" from finished wall.

ENCLOSURE:
Heater front shall withstand 10.8 ft. lbs. (324 poundals) impact and 400 lbs. static force applied to an 8 sq. in. area at center grille location with less than 1/16" permanent distortion. The combination return and supply grille assembly shall be constructed of 1/16" x 3/8" rounded edge horizontal steel louvers which shall be spaced for maximum opening of 1/4". Louvers shall be welded at every intersection to three evenly spaced 1/16" diameter vertical members and completely framed in a heavy gauge natural anodized aluminum extrusion. Front assembly shall be attached to the chassis by hidden tamper-resistant (Allen-head) machine screws. All other parts shall be 16 ga. steel zinc coated, both sides finished in a high gloss bronze colored baked enamel.

MOTOR:
Motor shall be a permanently lubricated unit bearing, totally enclosed shaded pole type with impedance protection. Motors shall operate at no more than 1400 RPM and shall be same voltage as the heater. A protective shield shall surround the motor to separate return air from heated air.

PERFORMANCE:
Heaters shall have a rating of 245 CFM at 660 F.P.M. with a maximum temperature rise of 73°F.

ELEMENTS:
Element assemblies shall consist of two or three corrosion resistant steel sheathed type elements mechanically bonded to common corrosion resistant steel fins. Each sheathed element shall consist of helically coiled nickel chromium alloy resistant wire completely embedded in and surrounded by magnesium oxide, enclosed and wedged into corrosion resistant steel sheaths. Elements shall have 2" cold conductor pins extending into the sheath and shall have a density of no more than 60 watts per inch.

THERMAL OVERLOAD:
Heaters shall be equipped with a "zero voltage reset" thermal overload which disconnects elements and motor in the event normal operating temperatures are exceeded. For safety, if opened due to abnormal temperature, thermal overload shall remain open until manually reset by turning heater off for five minutes. Automatic reset thermal overloads which allow the element to continue to cycle under abnormal conditions will not be accepted.

APPROVAL:
Heaters shall be Underwriters' Laboratories listed. Heaters shall conform to Underwriter's Laboratories, Inc. standard 2021, and shall not be required to have any "CAUTION" marking on the front of the heater. Heaters not conforming to these paragraphs will not be acceptable.

OPTIONAL CONTROL SYSTEMS:
Heaters shall be operated from wall-mounted, live voltage, heavy-duty (tamper-proof) thermostats.
Heaters with built-in, pre-wired contactors shall be operated from wall-mounted, line voltage, pilot duty (tamper-proof) thermostats.
Heaters built with, pre-wired contactors (and control transformers) shall be operated from wall-mounted, pilot duty (24V) or (120V) wall-mounted tamper-proof thermostats. Heaters shall be controlled by integrally mounted thermostats. Thermostats shall be heavy-duty, hydraulic type with a range of 40°F to 80°F and with remote sensing bulb placed in the return air. Thermostats shall be electrically rated at least 125% of heater rating. Thermostats shall also act as a disconnect by breaking all ungrounded conductors in the OFF position. (Thermostat control knob shall be covered by a 16 ga. tamper-proof access plate to prevent adjustment by unauthorized personnel.)

CONTACTORS:
Where required, heaters shall be equipped with heavy-duty, definite purpose contactors with flame path separators and dust covers. Contactors shall cycle all ungrounded conductors. Contactors shall have holding coils (of the same voltage as the heater) or (120 volts) or (24 volts).

CONTROL TRANSFORMERS:
Heater shall be equipped with a Class 2 control transformer, sealed rating of 20 VA, to supply control circuits of (24 volts) or (120 volts). (120 volt secondaries not available in single phase heaters over 3 KW).

CIRCUIT BREAKERS:
Heaters shall be equipped with built-in circuit breakers in order to allow the heaters to be supplied from feeder taps. A separate switch providing a positive off for control circuits shall be included where required. Circuit breakers and control switches shall be arranged so that all line side conductors will be separately enclosed when heater front is removed for servicing so that no current carrying parts are accessible without the use of additional tools.

Click to Email

SUBMITTAL DATA, 3420 & 3450 SERIES

Print Form

AGENT	PROJECT	ENGINEER	DATE

TAG					
QTY.					
MODEL					
WATTS					
VOLTS					
PHASE					
BUILT IN ACCESSORIES					
MOUNTING ACCESSORIES					
NOTES					

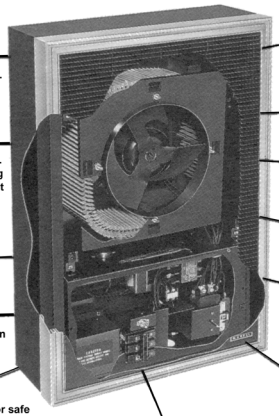

SLEEVE
For surface of semi-recessed installation. 16 gauge zinc coated steel.

ELEMENT
Totally enclosed corrosion resistant. Maximum finning for lower operating temperatures and longer life. Will not become dust clogged. (no filter required)

THERMAL CUT-OUT
Exclusive "zero voltage reset" type for highest degree of effectiveness if normal operating temperatures are exceeded.

TRANSFORMER
Optional factory assembled and wired in AFH / 3450 Series. Choice of 24 or 120 Volt secondary.

ENTRANCE TERMINALS
Line side termination enclosed for safe servicing of heaters when supplied with circuit breakers.

CIRCUIT BREAKERS
Reduces installation cost by allowing one or more heaters to be wired from feeder and feeder tap. Separate control circuit switch supplied when required. All power should be turned off before front cover is removed.

LOUVERED GRILL
Heavy-duty welded steel for maximum impact resistance. Closely spaced (pencil proof), and tamper proof.

MOTOR SHEILD
Protects motor by separating return air from heated air.

MOTOR
Heavy-duty unit bearing, permanently lubricated, totally enclosed, impedance protected.

BLADE
Highly efficient, space saving blade-over-motor design, individually balanced.

CONTACTOR
Optional, definate purpose heavy-duty type with flame path separators and dust covers. Choice of heater voltage: 120 or 24 Volt holding coil.

THERMOSTAT / DISCONNECT SWITCH
Optional heavy-duty hydraulic snap action type with sensing bulb in return air stream. Disconnects all ungrounded conductors in OFF position.

3420 Series

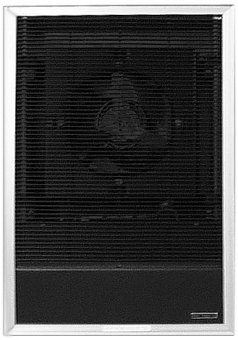

3450 Series

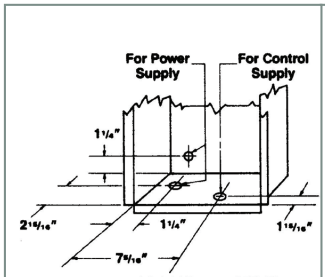

WALL BOX FOR 3420 SERIES
Front View

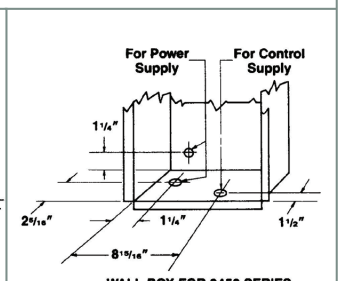

WALL BOX FOR 3450 SERIES
Front View

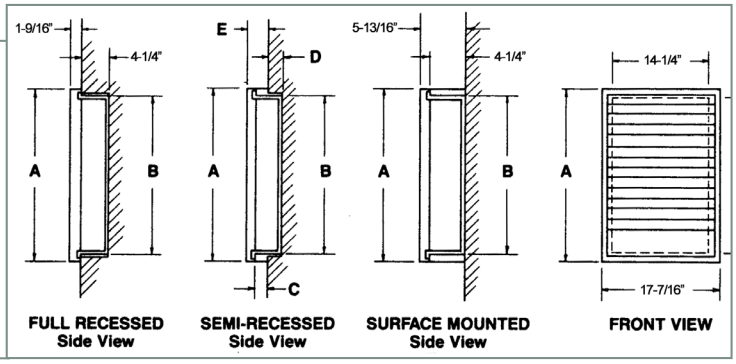

FULL RECESSED
Side View

SEMI-RECESSED
Side View

SURFACE MOUNTED
Side View

FRONT VIEW

DIMENSIONS			EXTENDERS						WT. (LBS)
			EX8			EX16			
Series	A	B	C	D	E	C	D	E	
3420	21-15/32”	19-3/8”	1”	3-1/4”	2-9/16”	2”	2-1/4”	3-9/16”	41
3450	25-1/32”	23-1/16”	1”	3-1/4”	2-9/16”	2”	2-1/4”	3-9/16”	55

Markel Products Company