ENCLOSURE AND MOTOR:
Element housing shall be 16 Gauge 304 or 316 stainless steel shroud. The outlet grill and louver assembly shall be 304 stainless steel and rotate for direction of discharge air. The heater shall have a 304/316 stainless steel inlet grill and fan guard. The motor shall be totally enclosed, permanently lubricated and designed to resist moisture and corrosion. The fan blade shall be aluminum with a powder coated epoxy finish.

ELEMENT:
The heating element shall be 304 or 316 stainless steel tube with 304 stainless steel fin material helically attached to the tube for even heat transfer. The element designed with the highest quality Nickel-Chromium resistance wire embedded in compacted efficient dielectric to ensure proper heat transfer.

CONTROL PANEL:
The control enclosure shall be non-metallic Nema 4X control panel water-tight and dust- tight. The enclosure and elements are attached to the control panel with stainless steel fasteners. Standard control components are factory mounted and wired with access through control panel door on bottom of heater assembly. A standard door interlock disconnect switch shall be factory mounted and wired for safety.

CONTROLS:
All controls shall be factory mounted and wired in Nema 4X panel. Terminal block, 24 volt transformer, high temperature limits, contactor and fusing if required by NEC are mounted and wired in control panel. A three-position switch (Off-Heat-Fan) shall be mounted on side of control panel for access from outside of panel. A pilot light to indicate power is on for safety shall be located on side of control panel. A wall mounted Nema 4X thermostat is an optional accessory.

MOUNTING BRACKET:
A formed 304 stainless steel bracket shall be used on 3.3 thru 15 KW units.
A cast iron epoxy painted bracket shall be used on 20 thru 48 KW units.
Above brackets shall be combination wall/ceiling type. Optional mounting brackets are available.

Click to Email

SUBMITTAL DATA, 5500 SERIES

Print Form

AGENT	PROJECT	ENGINEER	DATE

TAG					
QTY.					
MODEL NUMBER					
VOLTS / PHASE					
KW					
THERMOSTAT					
CONTROL OPTIONS					
MOUNTING BRACKET					
NOTES					

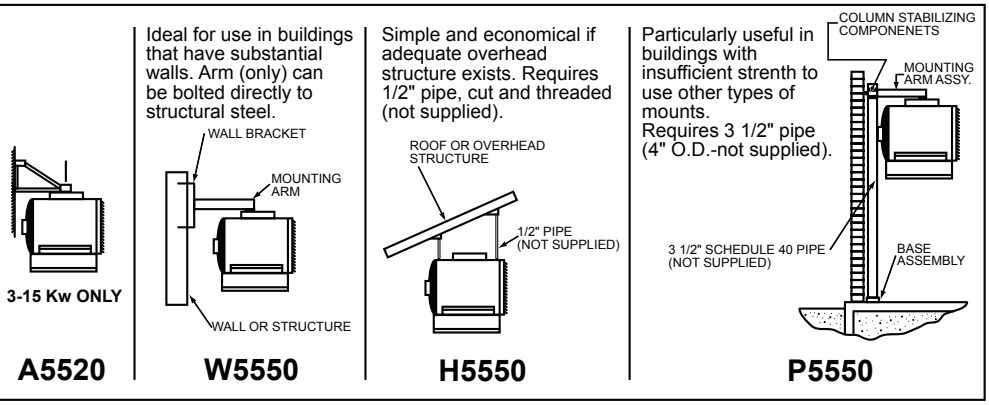

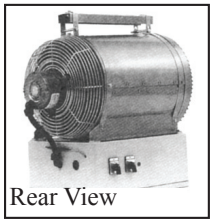
Rear View

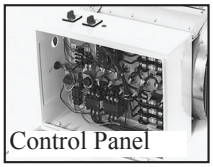
Control Panel

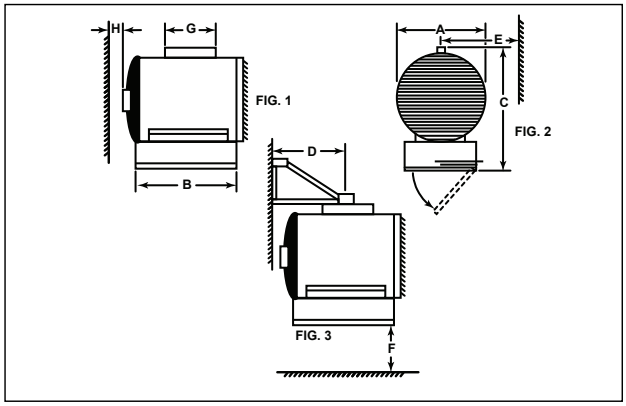

UPC# 686334	MODEL	DESCRIPTION
503242	TW155	1 POLE, 40-110 deg F, 22Amp
503259	TW255	2 POLE, 40-110 deg F, 22Amp

Note: NEMA 4X Construction Stainless Steel Hardware

SIZE KW	STAINLESS STEEL COMBINATION BRACKET	WALL MTG. BRACKET	HANGING BRACKET	PIPE MTG. BRACKET
3.3-15	A5520/UHB	W5520/WMK	H5520/HMK	P5520/PMK
20-48	----	W5550/WMK	H5550/HMK	P5550/PMK

Heater KW	Heater Dimension in Inches unless otherwise stated.								
	A	B	C	D	E	F	G	H	LBS
3-7.5	12.00	18.00	19.75	15.25	16.25	6 ft.	8.00	6.00	58
10-15	14.00	19.00	21.75	15.25	18.00		8.00	6.00	64
20-30	16.00	27.00	28.75	19.50	17.50		15.50	4.50	158
40-48	18.00	31.00	30.75	19.50	19.50		21.75	2.75	192

Markel Products Company